Scirocco dimensions

Volkswagen

Exterior dimensions

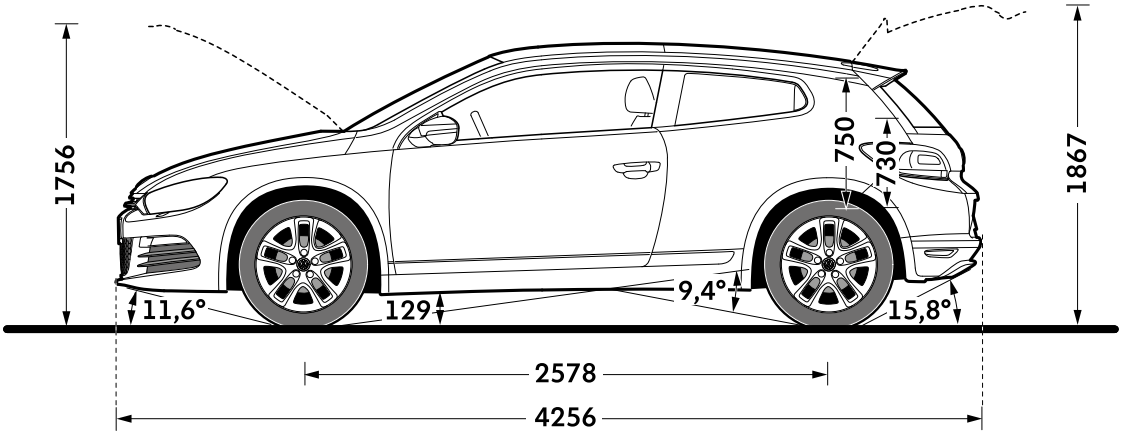

Exterior dimensions	Scirocco, GT, GT Black Edition, R-Line, R-Line Black Edition, GTS
Length, mm	4256
Height – opened bonnet/floor, mm	1756
Height – opened tailgate/floor, mm	1867
Wheelbase, mm	2578
Turning circle, m	11.0

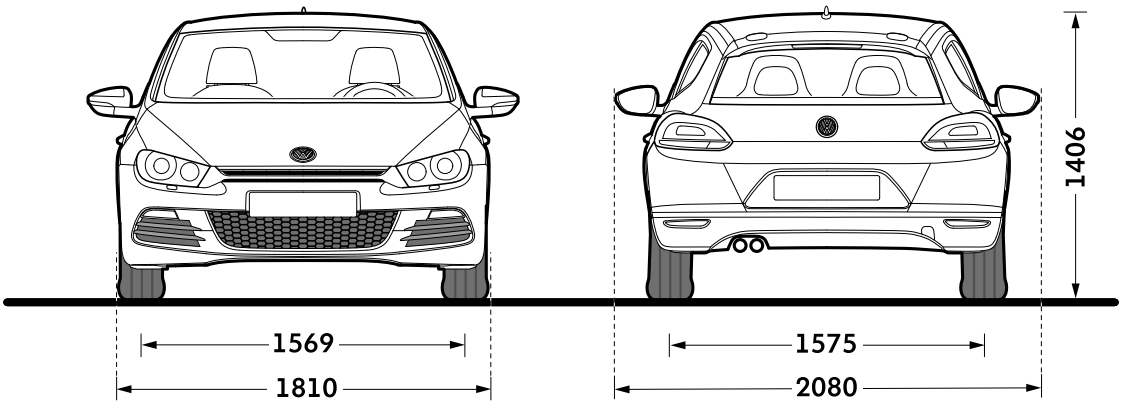

Exterior dimensions	Scirocco, GT, GT Black Edition, R-Line, R-Line Black Edition, GTS
Width – including door mirrors, mm	2080
Width – excluding door mirrors, mm	1810
Height, mm	1406

Figures shown are for standard specification models. The addition of certain factory-fitted options and/or accessories may affect some of the dimensions shown.

Scirocco dimensions

Volkswagen

Exterior and interior dimensions

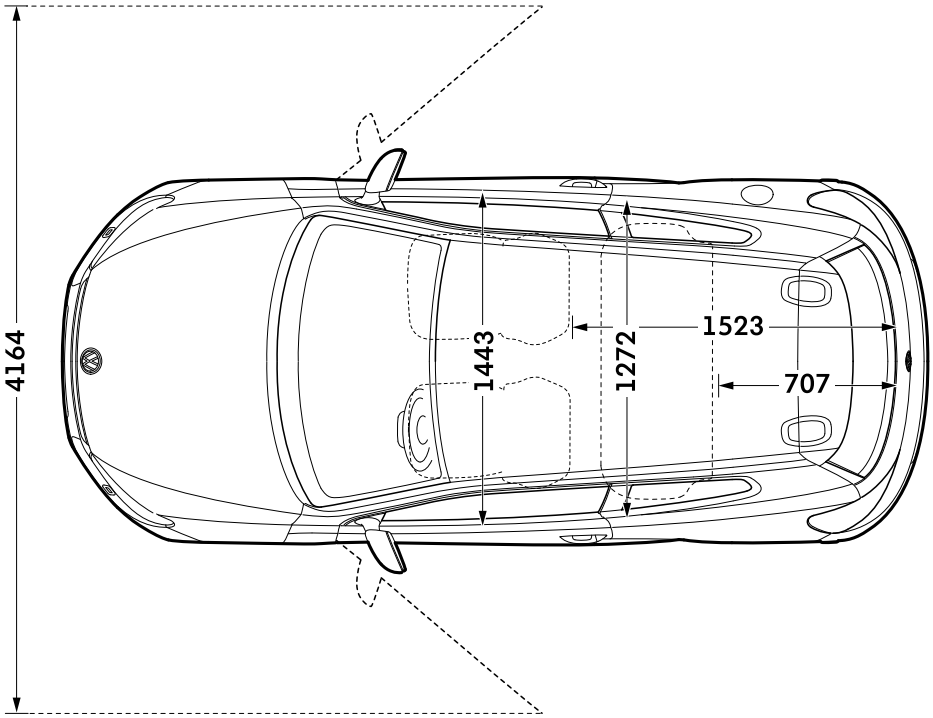

Exterior and interior dimensions	Scirocco, GT, GT Black Edition, R-Line, R-Line Black Edition, GTS
Width – opened doors, mm	4164
Elbow width, front, mm	1443
Elbow width, rear, mm	1272

Maximum luggage capacity, litres VDA measuring method using 200 x 100 x 50mm blocks	
With rear seat upright	312
With rear seats folded	1006

Interior dimensions

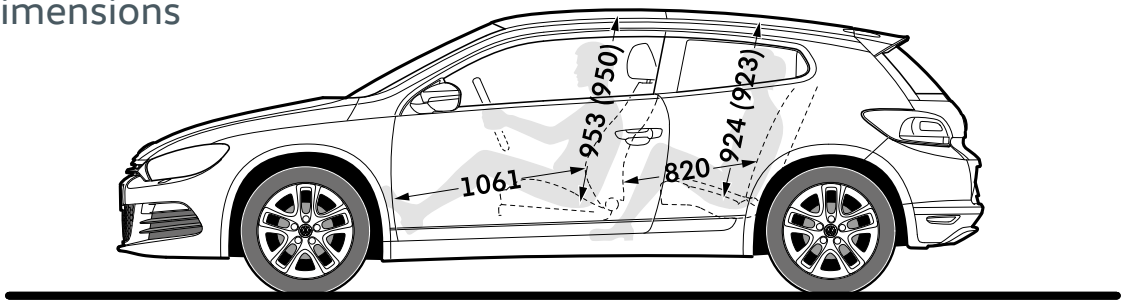

Interior dimensions	Scirocco, GT, GT Black Edition, R-Line, R-Line Black Edition, GTS
Effective headroom – front, mm (with sunroof)	953 (950)
Effective headroom – rear, mm (with sunroof)	924 (923)
Legroom, front, mm	1061
Legroom, rear, mm	820

Figures shown are for standard specification models. The addition of certain factory-fitted options and/or accessories may affect some of the dimensions shown.

Scirocco R dimensions

Volkswagen

Exterior dimensions

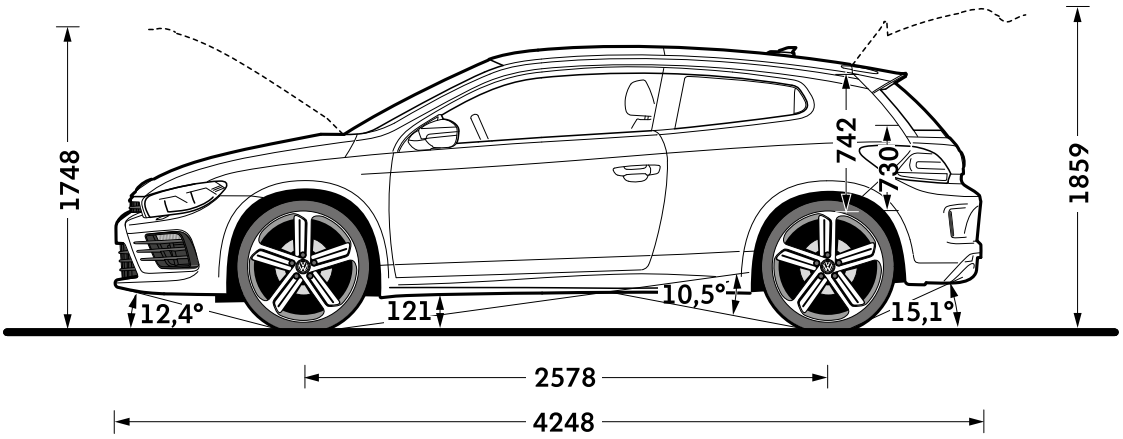

Exterior dimensions	R
Length, mm	4248
Height – opened bonnet/floor, mm	1748
Height – opened tailgate/floor, mm	1859
Wheelbase, mm	2578
Turning circle, m	11.0

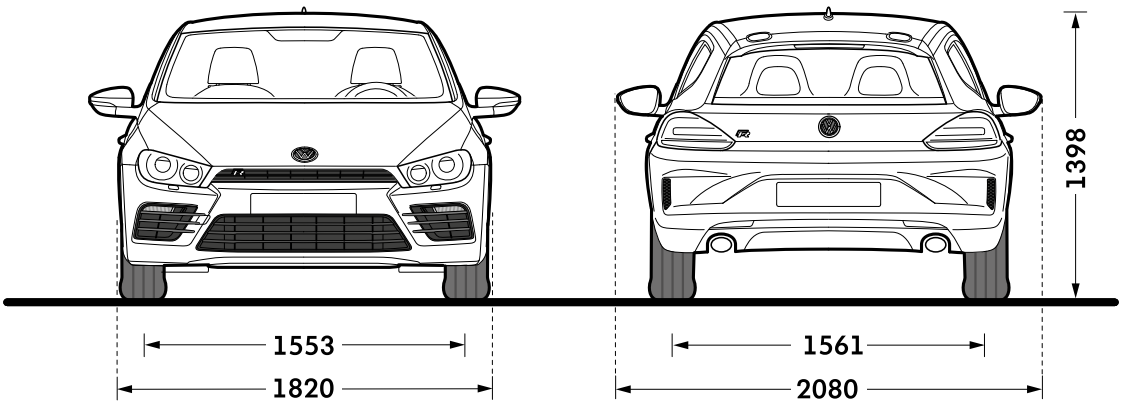

Exterior dimensions	R
Width – including door mirrors, mm	2080
Width – excluding door mirrors, mm	1820
Height, mm	1398

Figures shown are for standard specification models. The addition of certain factory-fitted options and/or accessories may affect some of the dimensions shown.

Scirocco R dimensions

Volkswagen

Exterior and interior dimensions

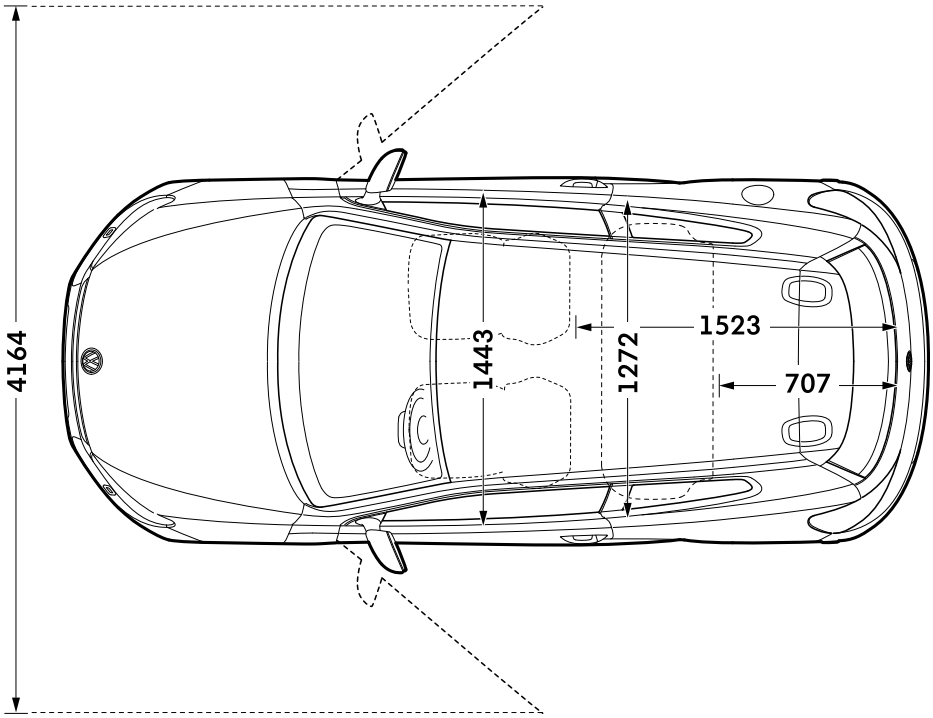

Exterior and interior dimensions	R
Width – opened doors, mm	4164
Elbow width, front, mm	1443
Elbow width, rear, mm	1272

Maximum luggage capacity, litres VDA measuring method using 200 x 100 x 50mm blocks	
With rear seat upright	312
With rear seats folded	1006

Interior dimensions

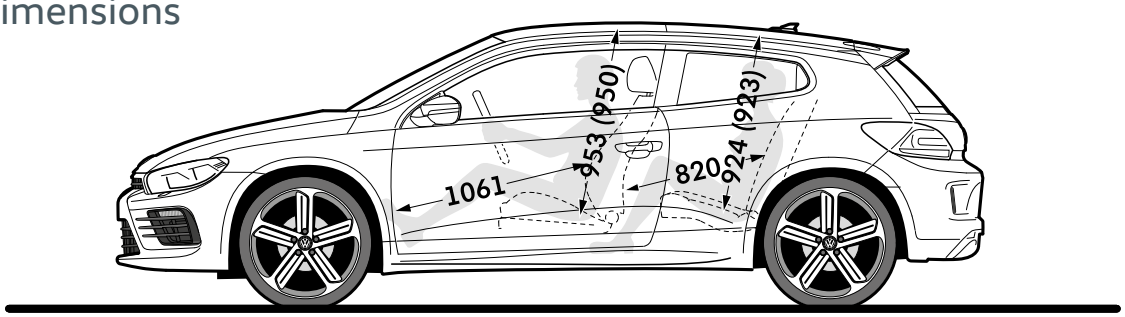

Interior dimensions	R
Effective headroom – front, mm (with sunroof)	953 (950)
Effective headroom – rear, mm (with sunroof)	924 (923)
Legroom, front, mm	1061
Legroom, rear, mm	820

Figures shown are for standard specification models. The addition of certain factory-fitted options and/or accessories may affect some of the dimensions shown.