Passat Saloon dimensions

Volkswagen

Exterior dimensions

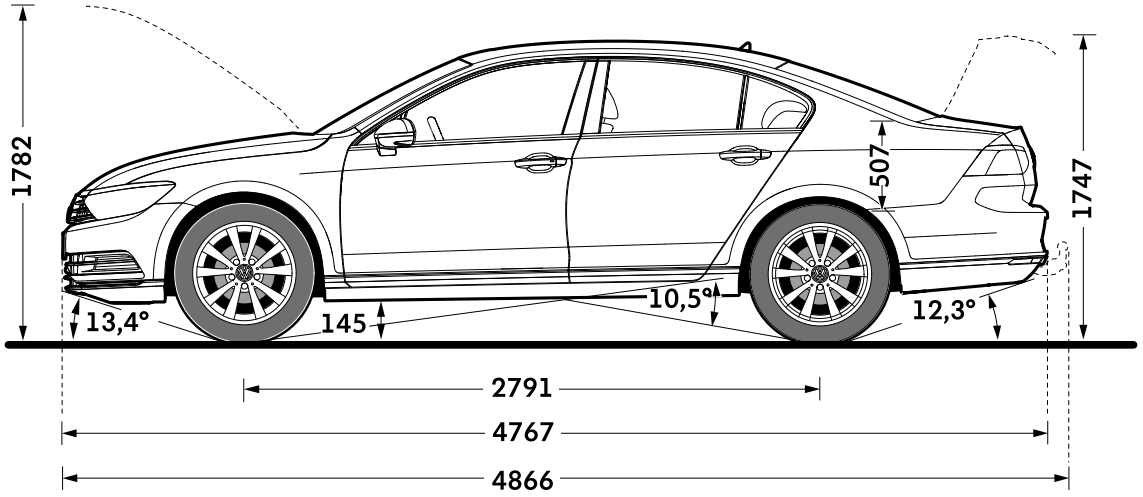

Exterior dimensions	Passat Saloon
Length, mm	4767
Height – opened bonnet/floor, mm	1782
Height – opened boot/floor, mm	1747
Wheelbase, mm	2791
Turning circle, m	11.7

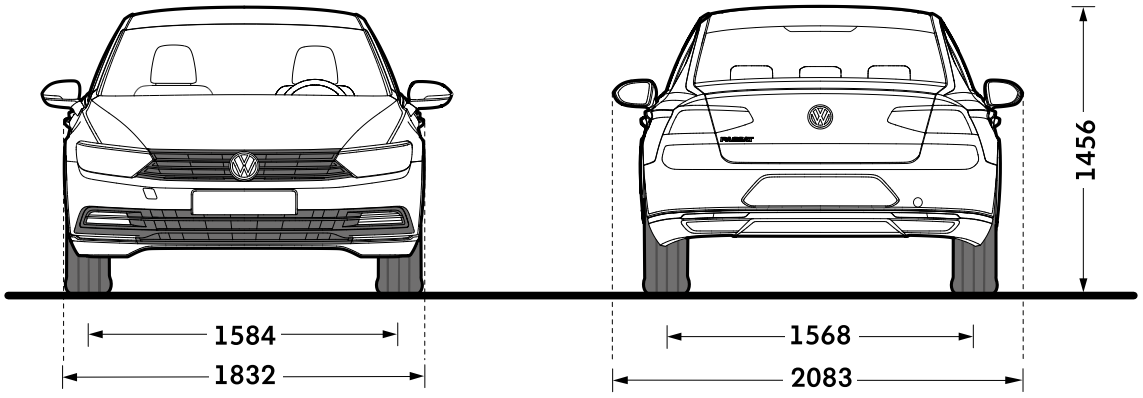

Exterior dimensions	Passat Saloon
Width – including door mirrors, mm	2083
Width – excluding door mirrors, mm	1832
Height, mm	1456

Figures shown are for standard specification models. The addition of certain factory-fitted options and/or accessories may affect some of the dimensions shown.

Passat Saloon dimensions

Volkswagen

Exterior and interior dimensions

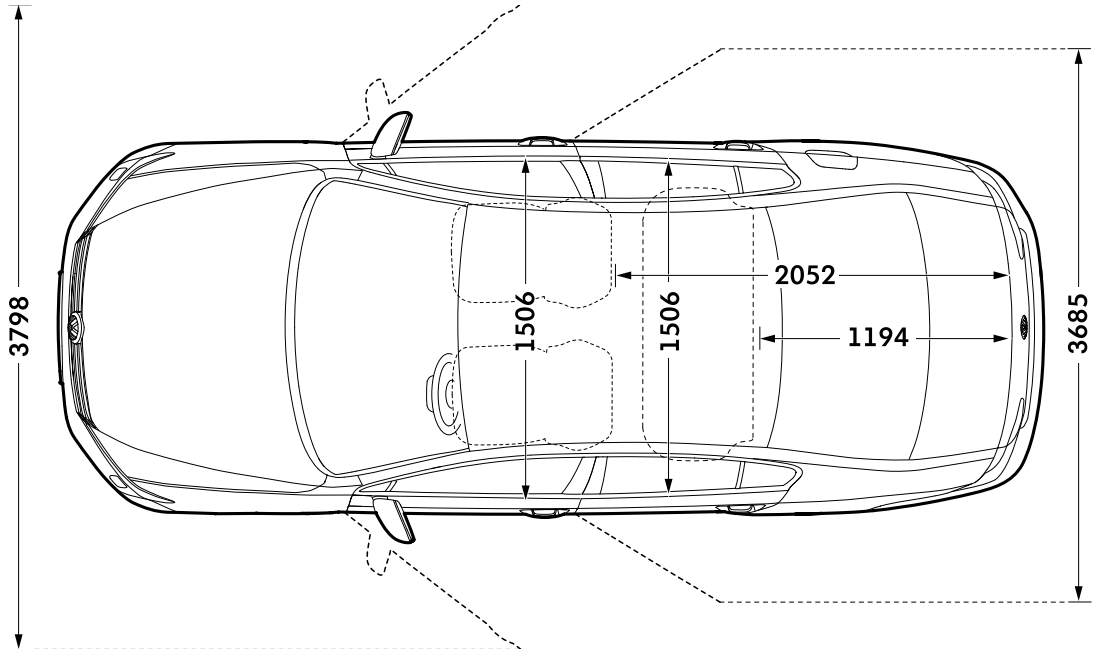

Exterior and interior dimensions	Passat Saloon
Width – opened front/rear doors, mm	3798/3685
Elbow width, front, mm	1506
Elbow width, rear, mm	1506

Maximum luggage capacity, litres VDA measuring method using 200 x 100 x 50mm blocks	
With rear seats upright	586
With rear seats folded	1152

Interior dimensions

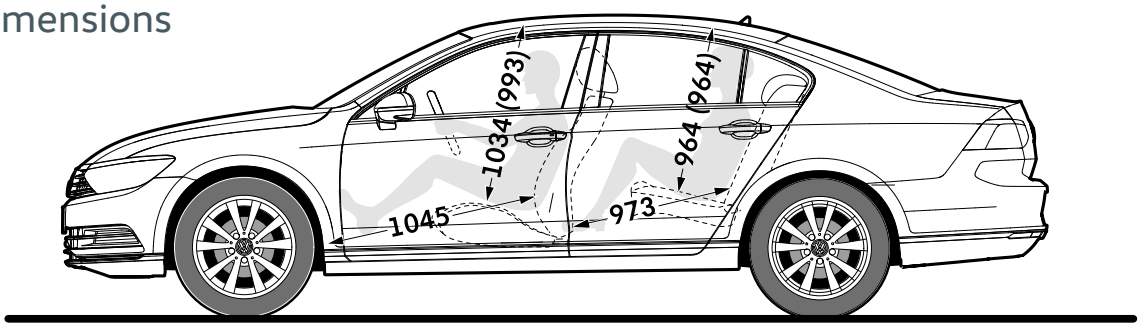

Interior dimensions	Passat Saloon
Effective headroom – front, mm (with sunroof)	1034 (993)
Effective headroom – rear, mm (with sunroof)	964 (964)
Legroom, front, mm	1045
Legroom, rear, mm	973

Figures shown are for standard specification models. The addition of certain factory-fitted options and/or accessories may affect some of the dimensions shown.